Website

Catalogue

佛山市顾德铭五金配件有限公司

FOSHAN GOOD FURNITURE HARDWARE CO.,LTD

办公室地址：广东省佛山市顺德区陈村镇金鋃国际金属交易广场北门写字楼1408

工厂地址：广东省佛山市顺德区

电话：0757-22232070

网址：www.e-shining.com

邮箱：Shelly.li@e-shining.cn

税号： 91440606MA55N3W40N

佛山市顾德铭五金配件有限公司

FOSHAN GOOD FURNITURE HARDWARE CO.,LTD

Factory Address: Shunde District, Foshan City, Guangdong Province

Office Address: Room No.1408, Office Building, North gate of Jinchang International Metal Trade Square, Chencun Town, Shunde District, Foshan City, Guangdong Province.

Telephone:0757-22232070

Web: Http:// www.e-shining.com

Https://www.goodfurniturehardware.com/index.asp

E-mail:Shelly.li@e-shining.cn

MST: 91440606MA55N3W40N

所有产品颜色及尺寸仅供参考，以产品实样为准，并保留最终解释权，模仿必究。

All figues on this catalogue is for refeence only subjectd to actual products.

We will not keep you informed for any change, will be explaint by our company.

E-SHINING® FURNITURE HARDWARE GOOD

QUALTY IS OUR LIFE

GDJLA-01

GDJLA-02

GDJLA-04

GDJLA-09

GDJLA-091

GDJLA-14

GDJLA-30

GDJLA-31

GDJLA-15

GDJLA-20

GDJLA-17

GDJLA-111

GDJLA-16

GDJLA-011

GDJLA-03

GDJLA-34

GDJLA-33

GDJLA-41

GDJLA-28

GDJLA-21

GDJLA-22

GDJLA-23

GDJLA-231

GDJLA-24

GDJLA-25

GDJLB-01

GDJLB-02

GDJLB-04

E-SHINING® FURNITURE HARDWARE

GOOD

QUALTY IS OUR LIFE

GDJLB-04H

GDJLB-044

GDJLB-045B

GDJLB-045H

GDJLB-046

GDJLB-047

GDJLB-06

GDJLB-08

GDJLB-081

GDJLB-082

GDJLB-09

GDJLB-091H

GDJLB-12

GDJLB-121

GDJLB-121D

GDJLB-121H

GDJLB-1213

GDJLB-13

GDJLB-16

GDJLB-16

E-SHINING® FURNITURE HARDWARE GOOD

QUALTY IS OUR LIFE

GDJLB-14

GDJLB-15

GDJLB-16

GDJLC-01

GDJLC-012

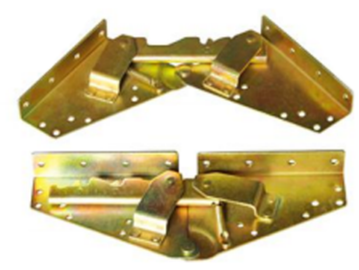

GDJLC-02

GDJLB-03

GDJLC-04

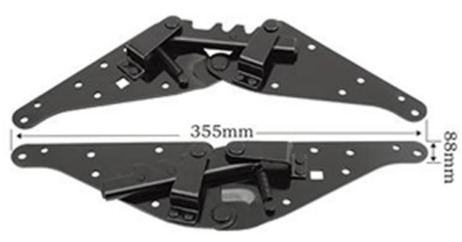

GDJLC-05

GDJLC-06

GDJLB-061

GDJLC-07

GDJLC-08

GDJLC-09

GDJLB-092

GDJLC-10

GDJLC-101

GDJLC-102

GDJLB-12

GDJLC-12

GDJLC-121

GDJLC-122

GDJLB-13

E-SHINING® FURNITURE HARDWARE GOOD

QUALTY IS OUR LIFE

GDJLC-14

GDJLC-141

GDJLC-15

GDJLB-151

GDA0626

GDA0624

GDA0625

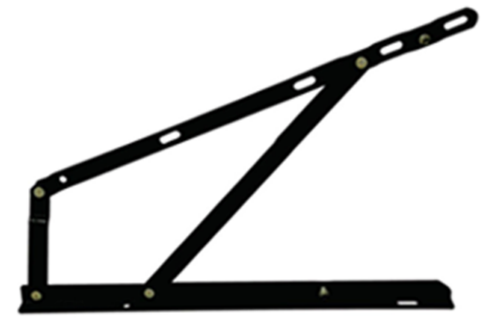

GDA0720

GDA0647

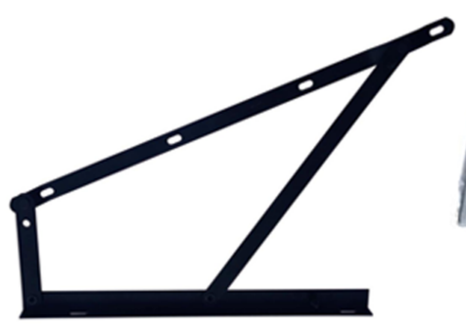

GDA0714

GDJLC-16

GDJLC-17

GDJLC-18

GDJLB-19

GDJLC-191

GDJLC-20

GDJLC-201

GDJLB-20A

GDJLC-19B

GDJLC-20C

GDJLC-20D

GDJLB-21

GDJLC-22

GDJLC-23

E-SHINING®
FURNITURE HARDWARE
GOOD
QUALTY IS OUR LIFE

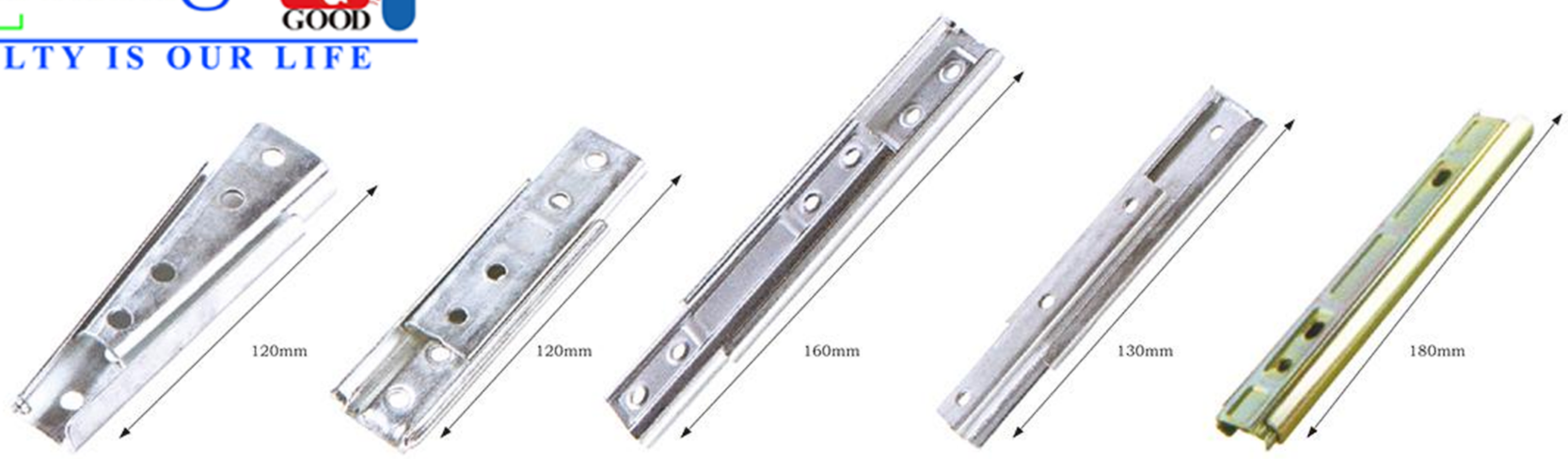

A款 B款 C款 D款 E款

GDJLC-24

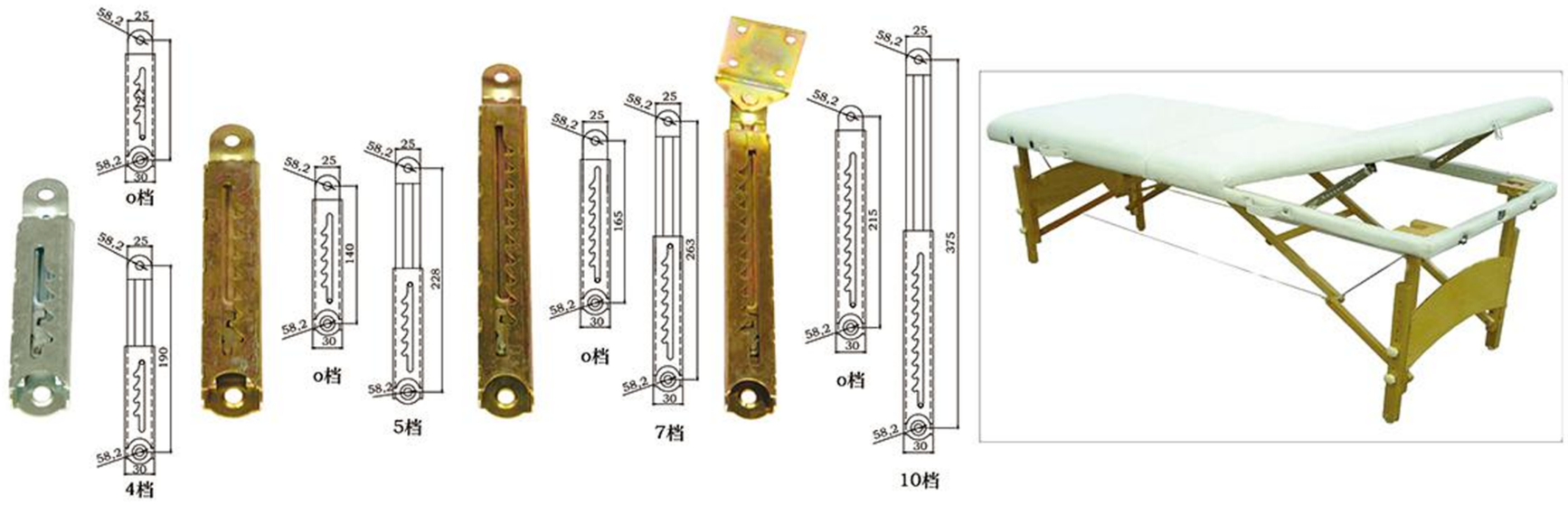

GDJLC-25

GDJLC-26

GDJLC-261

GDJLC-262

GDJLB-27

GDJLC-28

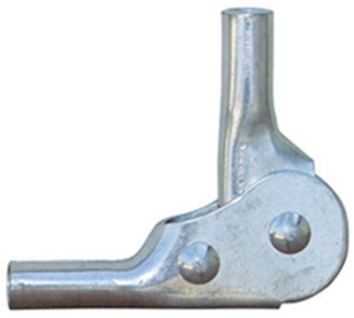

GDJLC-29

GDJLC-291

GDJLB-30

GDJLB-301

GDK-05

GDK-06

GDK-09

GDK-12

E-SHINING® FURNITURE HARDWARE GOOD

QUALTY IS OUR LIFE

GDA-9

GDA-3

GDA-2

GDA-5

GDDOS-1

GDEAM-1

GDBOS-4

GDAM-4

GDBOM-1

GDBOM-2

GDDOM-1

GDDOM-2

GDDOX-1

GDDOX-2

GDHAM-1

GDAN-1

GDBOS-1

GDBOM-3

GDLTD-1

GDYJ-459

GDYJ-452

GDYJ-457

GDCNL-103

GDYJ-870

GDYJ-831

GDYJ-834

GDYJ-845

GDYJ-847

GDCNL-112

E-SHINING® FURNITURE HARDWARE GOOD

QUALTY IS OUR LIFE

GDYJ-009

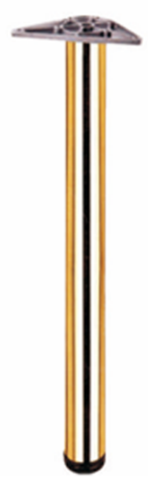
GDYJ-010

GDYJ-053

GDYJ-054

GDYJ-012

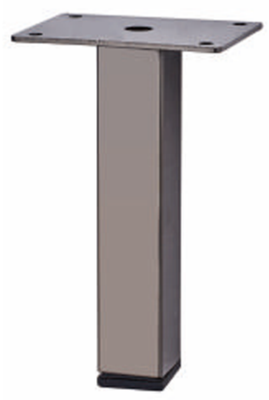
GDYJ-135A

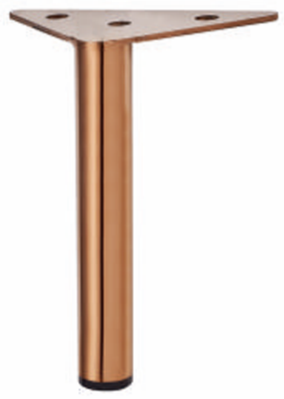
GDYJ-136F

GDYJ-3649

GDYJ-2629

GDYJ-2635

GDYJ-2522

GDYJ-2518

GDYJ-2527

GDYJ-2532

GDYJ-2533

GDYJ-2540

GDYJ-2541

GDYJ-2550

GDYJ-2794

GDYJ-0945

GDBL-81

GDBL-82

GDBL-83

GDBL-84

GDBL-85

GDBL-86

GDBL-87

GDBL-88

GDBL-89

GDBL-810

E-SHINING® FURNITURE HARDWARE GOOD

QUALTY IS OUR LIFE

GDBL-811

GDBL-812

GDBL-H1

GDBL-H2

GDBL-H3

GDBL-H4

GDBL-H5

GDBL-H6

GDBL-H7

GDBL-H8

GDBL-01

GDBL-02

GDBL-03

GDBL-04

GDBL-H5

GDBL-05

GDBL-06

GDBL-07

GDBL-13

GDBL-14

GDBL-10

GDBL-11

GDBL-12

GDBL-08

GDBL-09

GDBL-10

GDBL-11

GDBL-12

GDBL-13

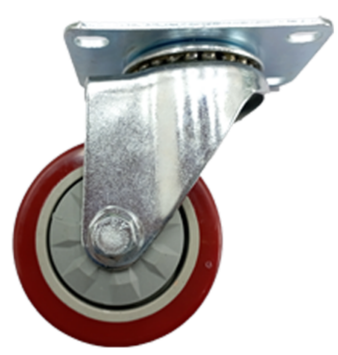

GDBL-14

MODEL: GDG123

※3D adjustment for Panel:±2mm for up and down side, front and back side; left and right side

(Using with lift & right as completed set)

- Material: Iron&Plastic
- Finish: Nickel plating
- Capacity:Light type 2.7-38kg,
  Medium type3.9-4.8kg, Heavy type:4.9-6kq
- Cabinet Height:250-500mm
- Cabinet Width: 600-1600mmPanel
- Thickness:16/18/22/26/28mm
- Use for upturning wooden door and aluminum-frame door

Features:

The lift system is suitable for cabinet with low height.

- With soft closing under angle 25°,
  max opening angle is 110°
- No need hinges for cabinet
- Easy to open, free stop function
- Force of opening or closing is adjustable
- Easy assembly and adjustment
- Different color options for decoration cover

MODEL: GDSH1000

- Soft closing & Push to open
- Opening angle :107°
- Door width up to 1200mm
- Door height: 250~650mm
- Door Weight: 2~12kg
- Door thickness:16~26mm
- 3D door adjustments
  Height adjustment +/-2mm
  Depth adjustment +/-2mm
  Side adjustment +/-2mm
- Stop at any desired positon
  .when the door opens at 52°±7°
- Adjustable soft-closing speed

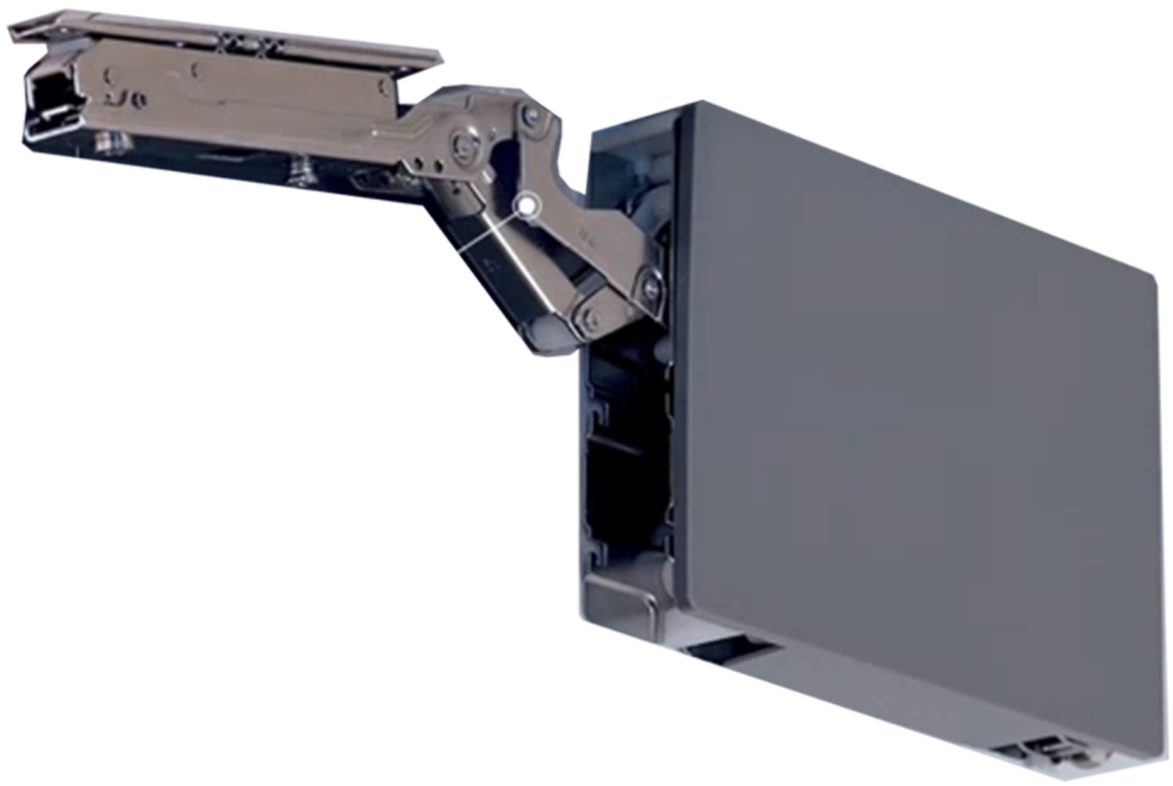

MODEL: GDG125

- Material: Zinc alloy+Plastic+Iron
- Finish: Nickel plating+Chome plating
- Capacity range: different options
- Cabinet Height: 600-1000mm
- Cabinet Width: ≤1200mm
- Thickness:16/18/22/26/28mm
- Use for high wall cabinet with 2 door panels

(Using with lift & right as completed set)

Features:

- Silent and effortless closing, because of interior damper
- Easy to open. Stop at any opening position.
  Provides excellent access to the cabinet interior
- Huge application variety. Easy to assembly and adjustment
- Stability, even with wide fronts. Excellent durability
- Door handle can be installed in ideal position
- No protruding parts

Installation Indication

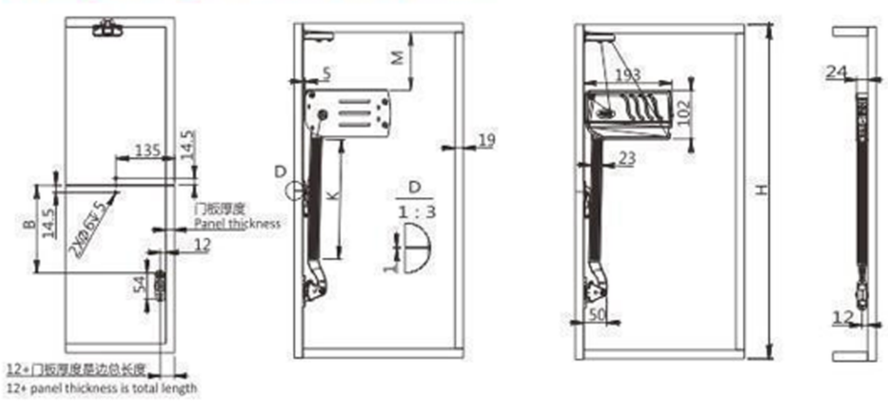

柜体高度：H Cabinet Height:H	600	650	700	750	800	850	900	950	1000
安装尺寸：M Installation Size:M	100	150	100	120	200	250	200	250	250
安装尺寸：B Installation Size:B	163	188	213	208	263	288	263	288	313
铝管长度：K Alu. Bar Length:K	200	200	300	300	300	300	350	350	400

说明：以上数据需配用安装卡安装
NOTE: The above data should be used with installation card
单位：mm
Unit:mm

MODEL: GDG127

- Material: Iron+Plastic+Alu
- Finish: Oxidtion
- Capacity:Light type: 3-4.52.7-38kg/pc,
  Heavy type: 5-6.5kq/pc
- Cabinet Height: 300-500mm
- Cabinet Width: ≤1200mm
- Cabinet Depth: > 250mm Panel
- Thickness:16/19/22/26/28mm
- Use for upturning wooden door and aluminum-frame door

Features:

- Product with free stop function when opening angle more than 30° and has soft closing function when closing angle under 30. because of interior damper.
- No need hinges for cabinet
- Easy to open
- Force adjustable
- Easy assembly and adjustment
- Compact structure, higher space utilization

Installation Indication

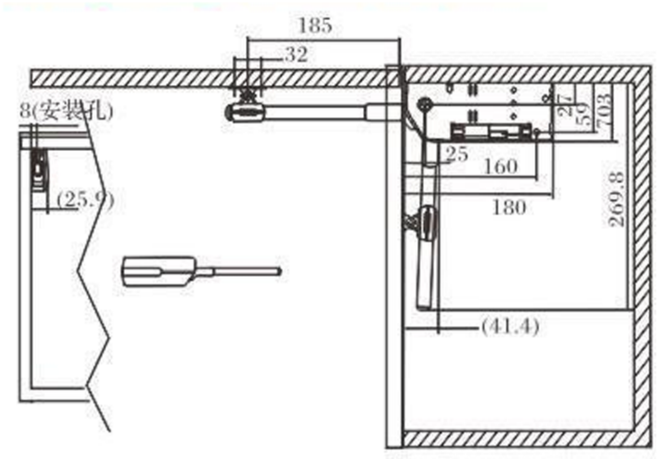

MODEL: GDG227

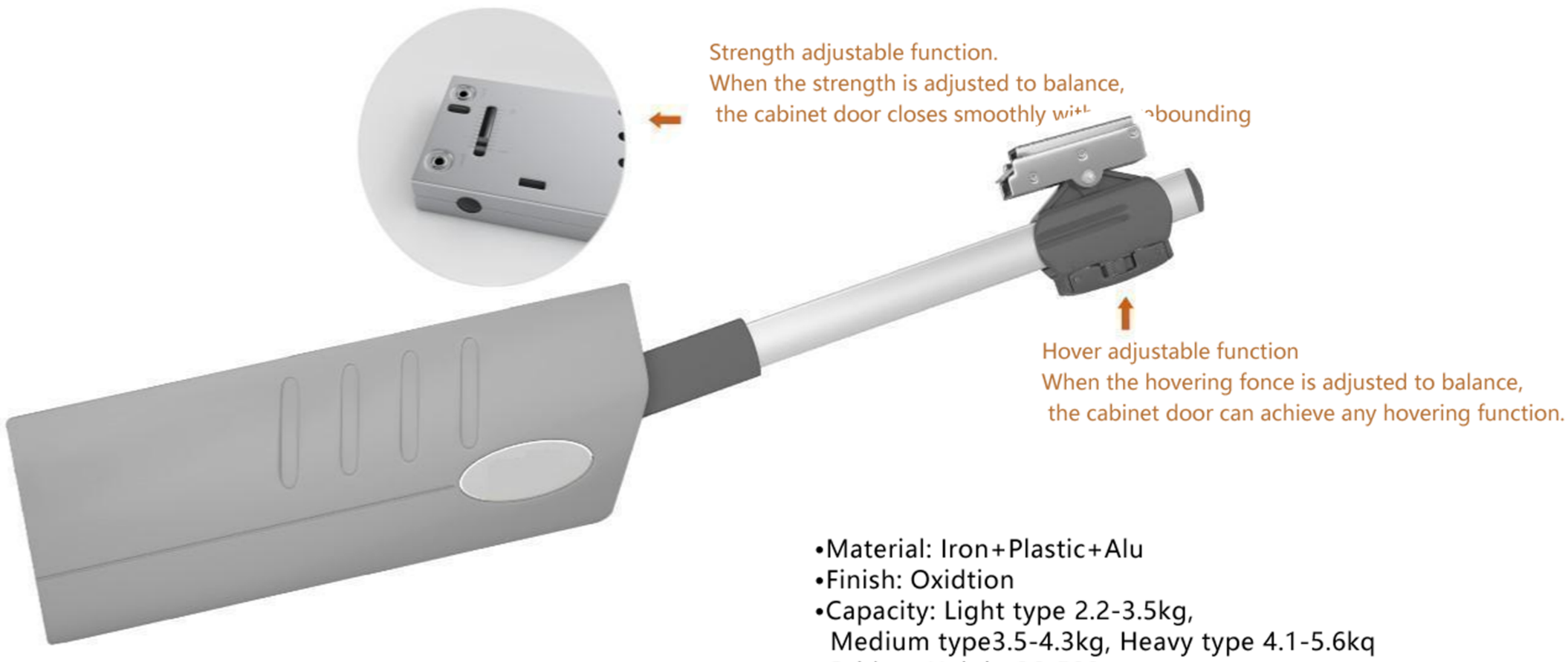

- Material: Iron+Plastic+Alu
- Finish: Oxidtion
- Capacity: Light type 2.2-3.5kg,
  Medium type3.5-4.3kg, Heavy type 4.1-5.6kq
- Cabinet Height:26-500mm
- Cabinet Width: ≤1000mm
- Thickness:16/19/22/26/28mm
- Use for upturning wooden door and aluminum-frame door

Features:

- Product with free stop function when opening angle more than 30° and has soft closing function when closing angle under 30.
- No need hinges for cabinet
- Easy to open
- Force adjustable
- Easy assembly and adjustment
- Compact structure, higher space utilization

Installation Indication

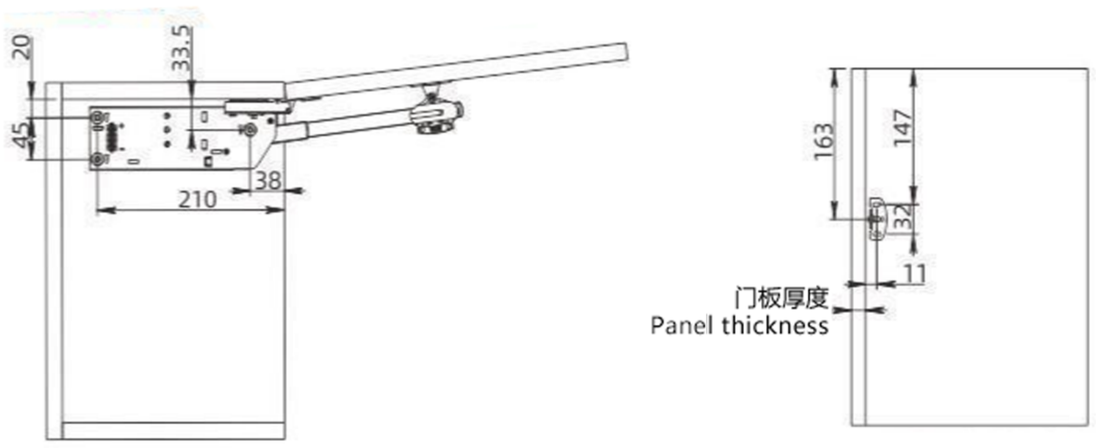

E-SHINING® FURNITURE HARDWARE GOOD

QUALTY IS OUR LIFE

MODEL: GDG317

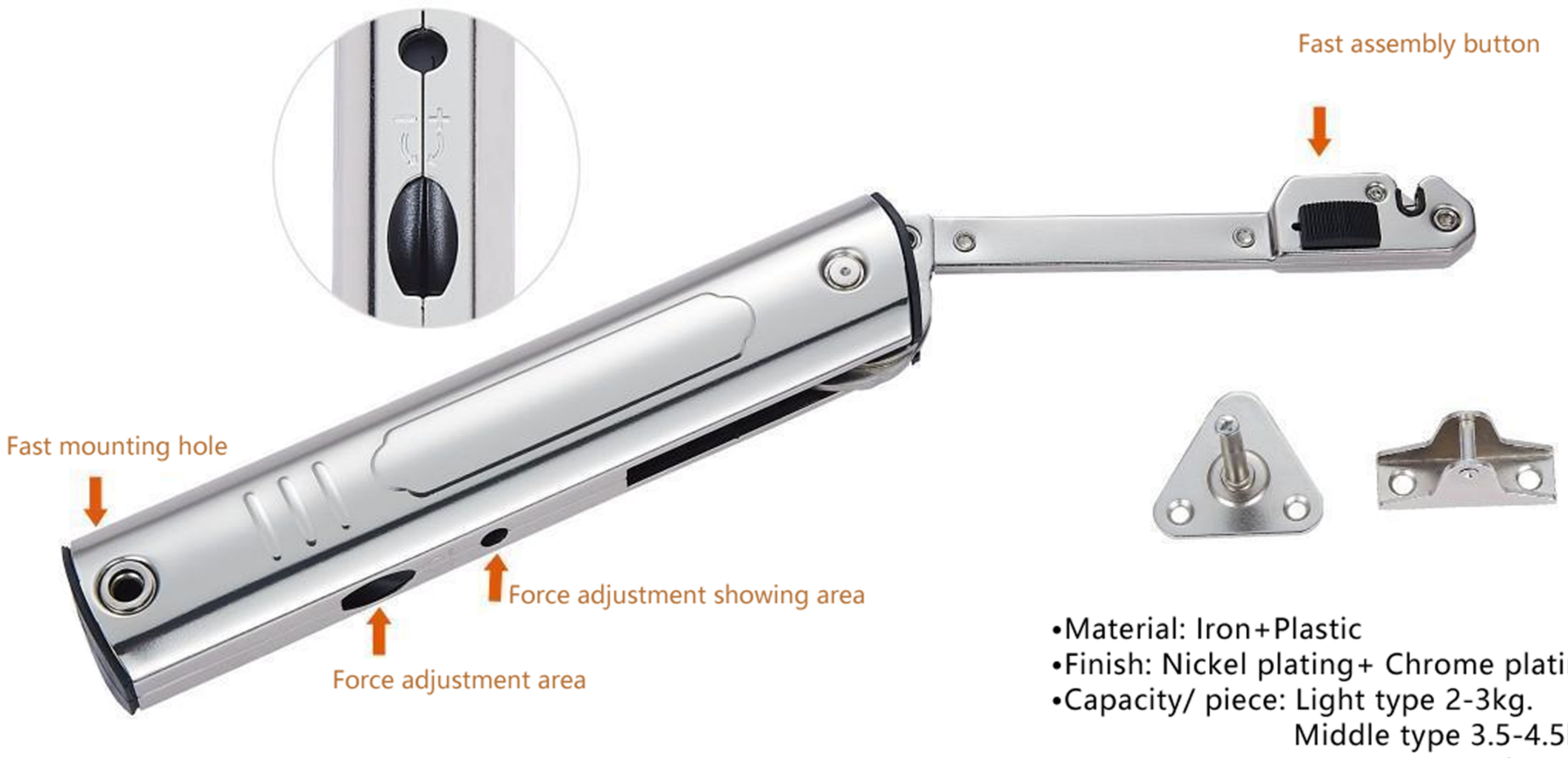

- Material: Iron+Plastic
- Finish: Nickel plating+ Chrome plating
- Capacity/ piece: Light type 2-3kg.
  Middle type 3.5-4.5kg
  Heavy type 5-6kg

(Using with lift & right as completed set)

Features:

- Free stop at any position in opening angle about 60°or less
- Door can soft close if used with soft hinges
- Force can be adjusted by turning the inside screw.

Installation Indication

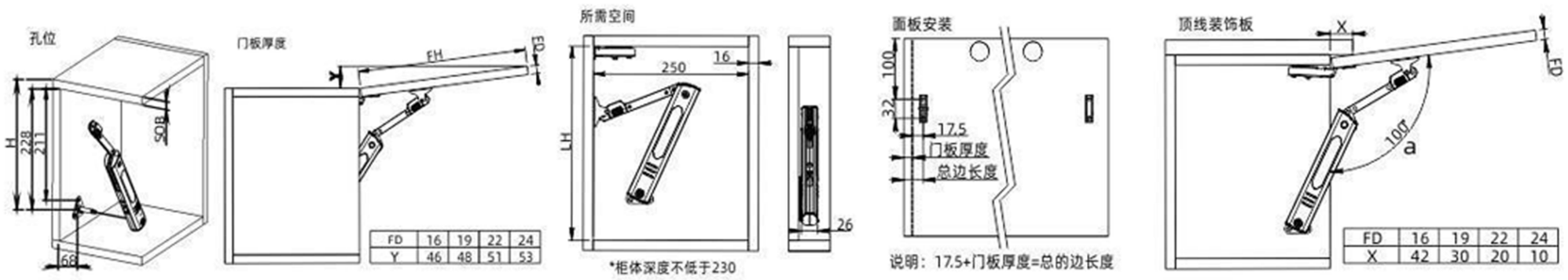

尺寸代码说明：

LH:净高	H:高度
FD:面板厚度	Y:面板与柜体高度
FH:面板高度	X:装饰板长度
SOB:柜体顶板厚度	a:角度

单位：mm

E-SHINING® FURNITURE HARDWARE GOOD

QUALTY IS OUR LIFE

MODEL: GDG327

- Material: Iron+Plastic+Alu
- Finish: Oxidtion
- Capacity: Light type 2.2-3.5kg, Medium type3.5-4.3kg, Heavy type 4.1-5.6kq
- Cabinet Height:260-500mm
- Cabinet Width: ≤1000mm
- Thickness:16/19/22/26/28mm
- Use for upturning wooden door and aluminum-frame door

Features:

- With interior damper, product with free stop function when opening anglemore than 30° and has soft closing function when closing angle under 30°.
- Easy to open
- Force adjustable
- Easy assembly and adjustment
- Compact structure, higher space utilization

Installation Indication

定位孔位置 Hole Size

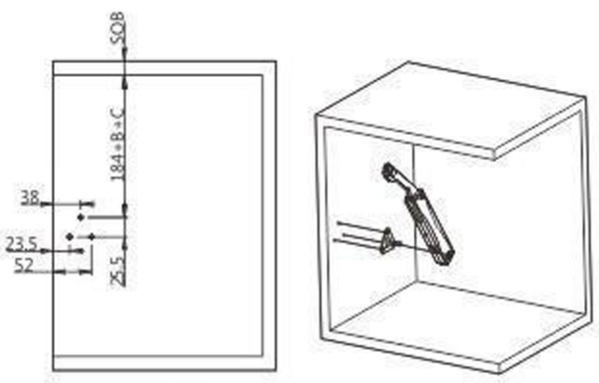

SOB 顶板厚度
SOB Top Side Front Thickness

所需空间 Needed Space

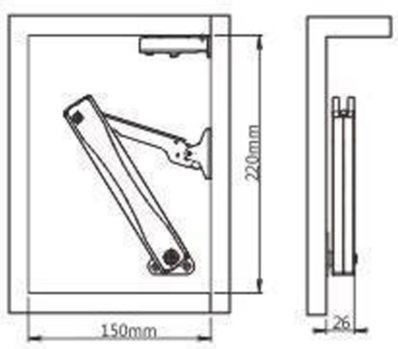

*最小空间尺寸
*Min Space

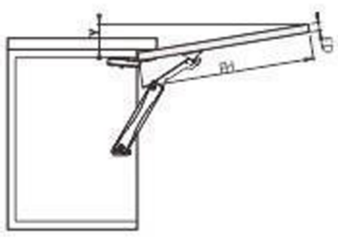

Y=(FH-a)X0.2
FH=面板高度 FH=Front Height

FD(mm)	16	19	22	24
a(mm)	42	31	20	12

面板加工-
木质面板和宽边铝框面板
Front Holes -
Wooden Front and
Wide Aluminum Front

顶线/饰板 所需空间
Top Side/ Decoration Front Space

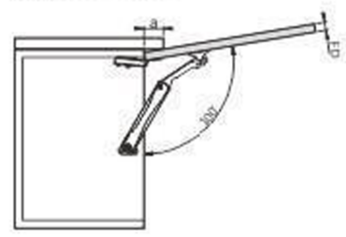

FD(mm)	16	19	22	24
a(mm)	42	31	20	12

E-SHINING® FURNITURE HARDWARE GOOD

QUALTY IS OUR LIFE

MODEL: GDG313

Optional type

Model	Specification	Features
G313	杆长: 60~90cm Length of the bar: 60~90cm 杆材质:铝Bar materials: Aluminum	标准 Standard
G313- L (加长)	杆长: 90~120cm length of the bar: 90~120cm 杆材质:铝Bar materials: Aluminum	标准 Standard

- Finish: Painting/Powder
- Materials: Znic alloy + Iron + Plastic
- Load weight:8 Kg
- Available: Up-turning wooden door and aluminum-frame door

MODEL: GDG313-B

Optional type

Model	Specification	Features
G313- B	杆长:60~90cm length of the bar: 60~90cm 杆材质:铝Bar materials: Aluminum	带缓冲效果 With buffering function

- Finish: Painting/Powder
- Materials: Znic alloy + Iron + Plastic
- Load weight:8 Kg
- Available: Up-turning wooden door and aluminum-frame door

MODEL: K19

Solf Closing Damping Gas Spring
Advantaes
1.Angle of soft close can be adjustes
2.Soft closing

Model	Pip Diameter (mm)	Rod Diameter (mm)	Legth(mm)	Hole Distancel (mm)	Stroke (mm)	Standard Pressure
K19	¢15	¢6	318	280	90	50-150N

- Finish: Painting
- Materials: Steel+ Plastic
- Available: Up-turning wooden door and aluminum-frame door

E-SHINING® FURNITURE HARDWARE GOOD

QUALTY IS OUR LIFE

MODEL: K21

Solf Closing Damping Gas Spring
Advantaes
1.Angle of soft close can be adjustes
2.Soft closing

Model	Pip Diameter (mm)	Rod Diameter (mm)	Legth(mm)	Hole Distancel (mm)	Stroke (mm)	Standard Pressure
K21	¢15	¢6	300	278	90	50-150N

•Finish: Painting
•Materials: Steel + Plastic
•Available: Up-turning wooden door and aluminum-frame door

MODEL: K23

Solf Closing Damping Gas Spring
Advantaes
Slight Soft Closing
Angle Can't Be Adjusted

Model	Pip Diameter (mm)	Rod Diameter (mm)	Legth(mm)	Hole Distancel (mm)	Stroke (mm)	Standard Pressure
K23	¢15	¢6	282	252	90	50-150N

•Finish: Painting
•Materials: Steel+ Plastic
(Piston with open & close buffering function is customized)
•Available: Up-turning wooden door and aluminum-frame

MODEL: K20

Solf Closing Damping Gas Spring
Advantaes
1.Angle of soft close can be adjustes
2.Soft closing

Model	Pip Diameter (mm)	Rod Diameter (mm)	Legth(mm)	Hole Distancel (mm)	Stroke (mm)	Standard Pressure
K20	¢15	¢6	299	276	90	50-150N

•Finish: Painting
•Materials: Steel+ Plastic
•Available: Up-turning wooden door and aluminum-frame door

E-SHINING® FURNITURE HARDWARE GOOD

QUALTY IS OUR LIFE

MODEL: B2

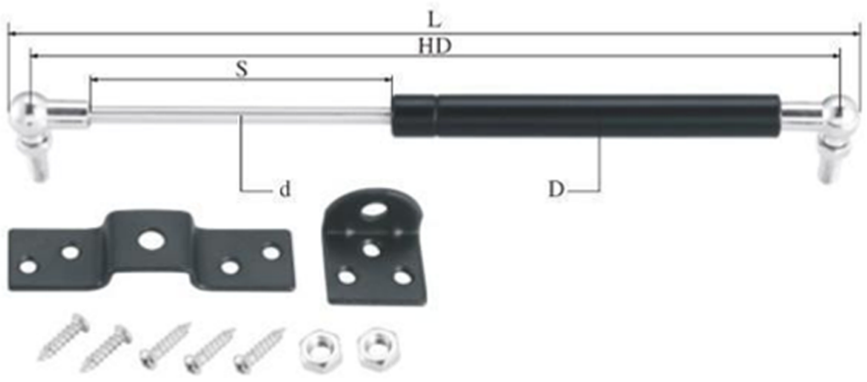

Model	Pip Diameter (mm)	Rod Diameter (mm)	Legth(mm)	Hole Distancel (mm)	Stroke (mm)	Standard Pressure
B2	¢15	¢6	300	286	106	50-150N
			314	300	113	

MODEL: X4/Y4

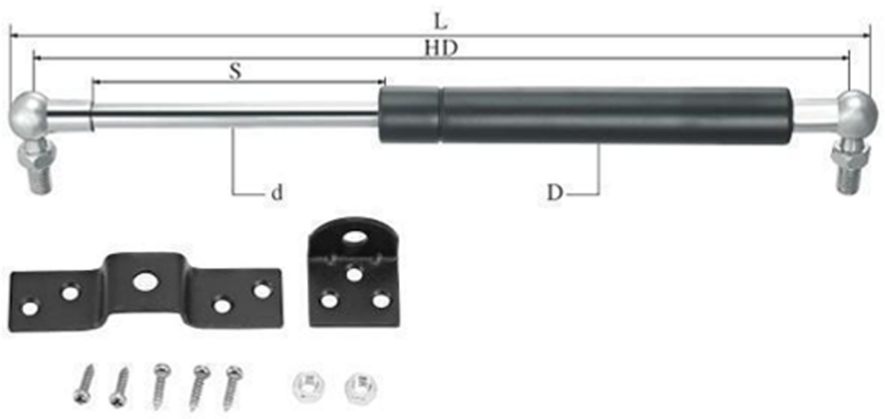

Model	Pip Diameter (mm)	Rod Diameter (mm)	Legth(mm)	Hole Distancel (mm)	Stroke (mm)	Standard Pressure
X4-001	ϕ18	ϕ8	300	286	102	50-500N
X4-002			320	306	112	
X4-003			350	335	127	
X4-004			375	361	139	
X4-005			400	386	152	
X4-006			450	436	177	
X4-007			500	486	202	
X4-008			600	586	252	

Model	Pip Diameter (mm)	Rod Diameter (mm)	Legth(mm)	Hole Distancel (mm)	Stroke (mm)	Standard Pressure
Y4-001	ϕ22	ϕ10	300	286	102	50-500N
Y4-002			350	336	127	
Y4-003			375	361	139.5	
Y4-004			400	456	187	
Y4-005			430	416	167	
Y4-006			450	436	177	
Y4-007			500	486	202	
Y4-008			600	586	252	

High Standard Gas Spring Series

Finish: Painting/Powder
Materials: Steel
Max weight: According to customer requirements
Available: Multi-purpose
Color: Silver、black、etc

MODEL: X5/Y5

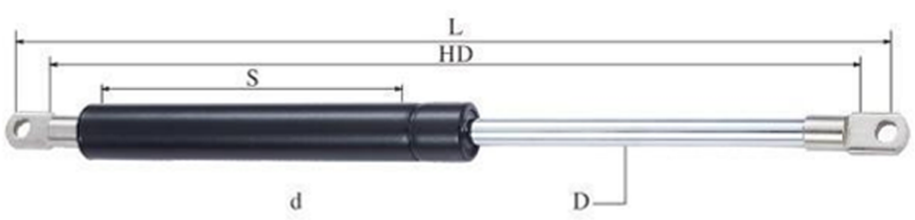

Model	Pip Diameter (mm)	Rod Diameter (mm)	Legth(mm)	Hole Distancel (mm)	Stroke (mm)	Standard Pressure
X5-001	ϕ18	ϕ8	305	292	105	50-500N
X5-002			355	340	130	
X5-003			380	367	142	
X5-004			405	394	156	
X5-005			435	422	170	
X5-006			455	442	180	
X5-007			505	492	205	
X5-008			605	592	255	

Model	Pip Diameter (mm)	Rod Diameter (mm)	Legth(mm)	Hole Distancel (mm)	Stroke (mm)	Standard Pressure
Y5-001	ϕ22	ϕ10	305	292	105	50-500N
Y5-002			355	340	130	
Y5-003			380	367	142	
Y5-004			405	394	156	
Y5-005			435	422	170	
Y5-006			455	442	180	
Y5-007			505	492	205	
Y5-008			605	592	255	

可选配件
Accessory options

C1 C2 C3

High Standard Gas Spring Series

Finish: Painting/Powder
Materials: Steel
Max weight: According to customer requirements
Available: Multi-purpose
Color: Silver、black、etc

E-SHINING® FURNITURE HARDWARE GOOD

QUALTY IS OUR LIFE

MODEL: K2

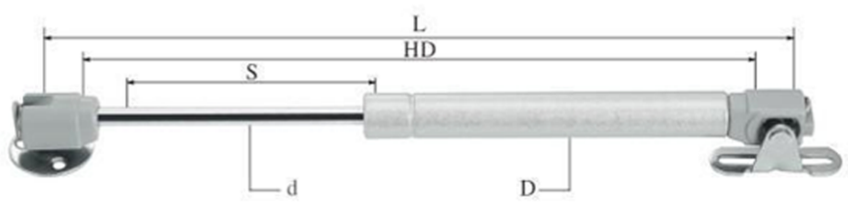

Model	Pip Diameter (mm)	Rod Diameter (mm)	Legth(mm)	Hole Distancel (mm)	Stroke (mm)	Standard Pressure
K2-001	ϕ15	ϕ8	270	248	91	30-500N
K2-002			178	156	45	
K2-003			207	185	59.5	
K2-004			230	208	70	
K2-005			237	215	74.5	
K2-006			300	278	106	
K2-007			322	300	117	
K2-008			382	360	147	

MODEL: K5

Model	Pip Diameter (mm)	Rod Diameter (mm)	Legth(mm)	Hole Distancel (mm)	Stroke (mm)	Standard Pressure
K5-001	ϕ15	ϕ6	264	250	91	30-250N
K5-002			170	156	44	
K5-003			199	185	58.5	
K5-004			215	201	66.5	
K5-005			230	216	74	
K5-006			300	286	109	
K5-007			314	300	116	
K5-008			374	360	146	

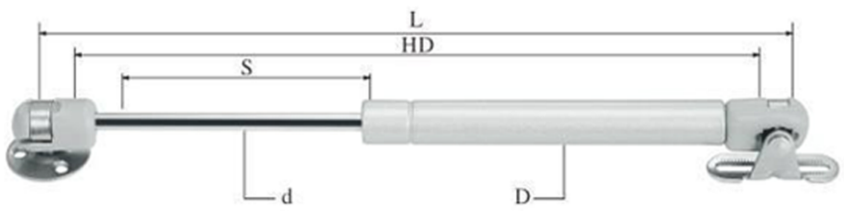

产品型号 Model	管径Pip Diameter(mm)	中心杆 Rod Diameter(mm)	打开长度 Legth(mm)	中心距 Hole Distance(mm)	行程 Stroke(mm)	常规压力 Standard Pressure
K7-001	ϕ15	ϕ6	270	248	91	30-250N
K7-002			178	156	45	
K7-003			207	185	59.5	
K7-004			230	208	71	
K7-005			237	215	74.5	
K7-006			300	278	106	
K7-007			322	300	117	
K7-008			382	360	147	

The selection method of gas spring force

气弹簧力值的选择方式

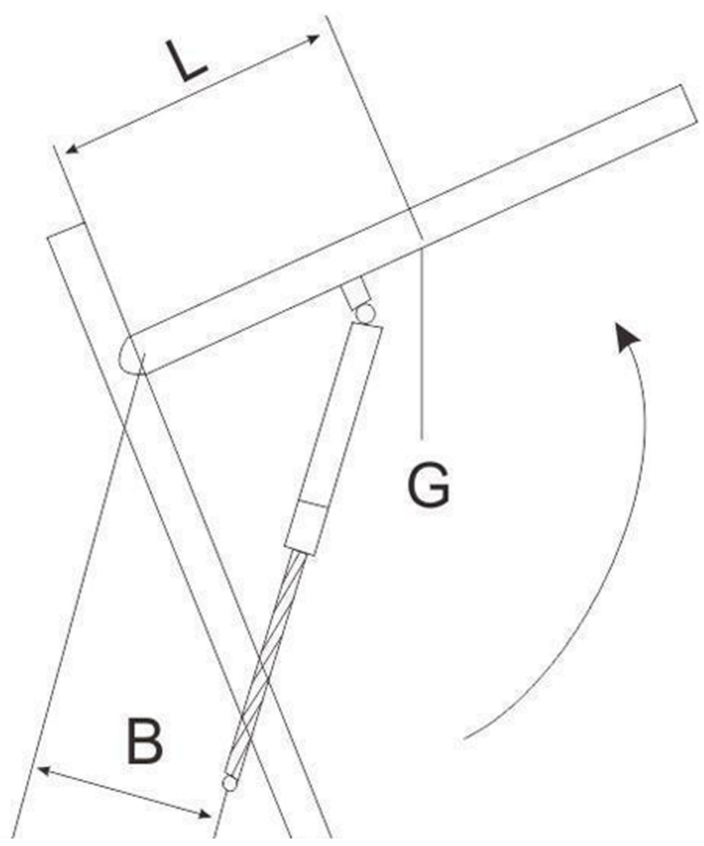

F1-Minimum extension force, unit : N
F1-最小伸展力，单位为N

G- Gravitational force of supported item, unit: N
G-举撑重力，单位为N

L-Distance from gravity center of panel to cabinet rotation center,
unit: mm
L-重心到回转中心的距离，单位为mm

b-the effective arm of force when gas spring is extended,
unit: mm
b-气弹簧杆臂伸展时的有效力臂，单位为mm

n-The using quantity of gas spring:
n-气弹簧使用数量:

K-Safety factor, general condition: k=1.1, also can be negotiated.
K-安全系数，一般 k=1.1,亦可有供需双方协商而定

E-SHINING® FURNITURE HARDWARE GOOD

QUALTY IS OUR LIFE

GDYS-100S

GDYS-100G

GDYS-100B

GDYS-101S

GDYS-101G

GDYS-101B

GDYS-103S

GDYS-103G

GDYS-103B

GDYS-104

GDYS-105

GDYS-106

GDYS-107

GDYS-108

GDYS-109

GDYS-110

GDYS-111

GDYS-112

GDYS-113

GDYS-305

GDYS-306

GDYS-307